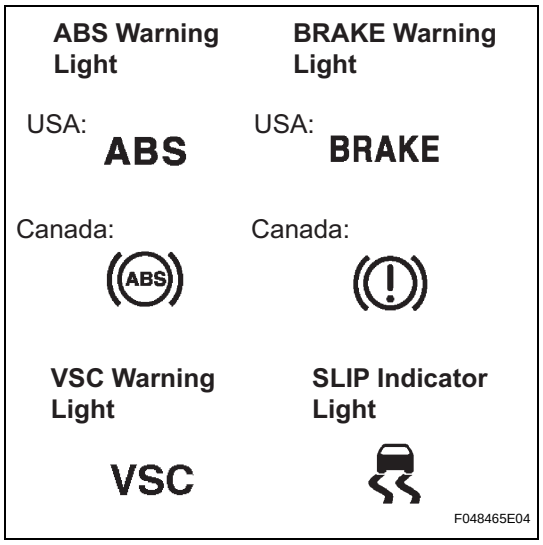

DIAGNOSIS SYSTEM

1. DIAGNOSIS

(a) If the skid control ECU detects a malfunction, the ABS, BRAKE, VSC warning lights and SLIP indicator light will come on to warn the driver.
The table below indicates which lights come on when there is a malfunction in a particular function.

Item / Trouble Area	ABS	EBD	BA (Brake Assist)	TRAC	VSC	Skid Control ECU
ABS Warning Light	○	○	○	-	-	○
BRAKE Warning Light	-	○	-	-	-	○
SLIP Indicator Light	○	○	○	○	○	○
VSC Warning Light	○	○	○	○	○	○

○: Light ON
-: Light OFF

- The DTCs are simultaneously stored in memory. The DTCs can be read by connecting the SST between TC and CG terminals of the DLC3 and observing the blinking of the ABS warning light and VSC warning light, or by connecting an intelligent tester.
- This system has a sensor signal check function (TEST MODE).
  The DTC can be read by connecting the SST between terminals TS and CG of the DLC3 and observing the blinking of the ABS warning light and VSC warning light, or by connecting an intelligent tester.

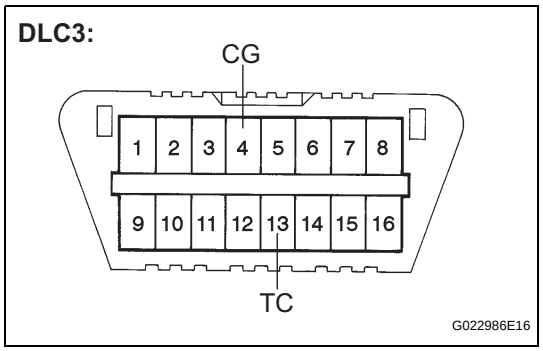

DTC CHECK / CLEAR

1. DTC CHECK (USING SST CHECK WIRE)

(a) Check DTCs.

(1) Using SST, connect terminals TC and CG of the DLC3.
SST 09843-18040

(2) Turn the ignition switch to the ON position.

BC

(3) Read the DTC from the ABS warning light and VSC warning light on the combination meter.
HINT:
If no code appears, inspect the TC and CG terminal circuit or ABS warning light circuit.

Trouble Area	See procedure
TC and CG terminal circuit	BC-187
ABS warning light circuit	BC-161 or BC-165
VSC warning light circuit	BC-168 or BC-172

(4) As examples, the blinking patterns for a normal system code and trouble codes 11 and 21.

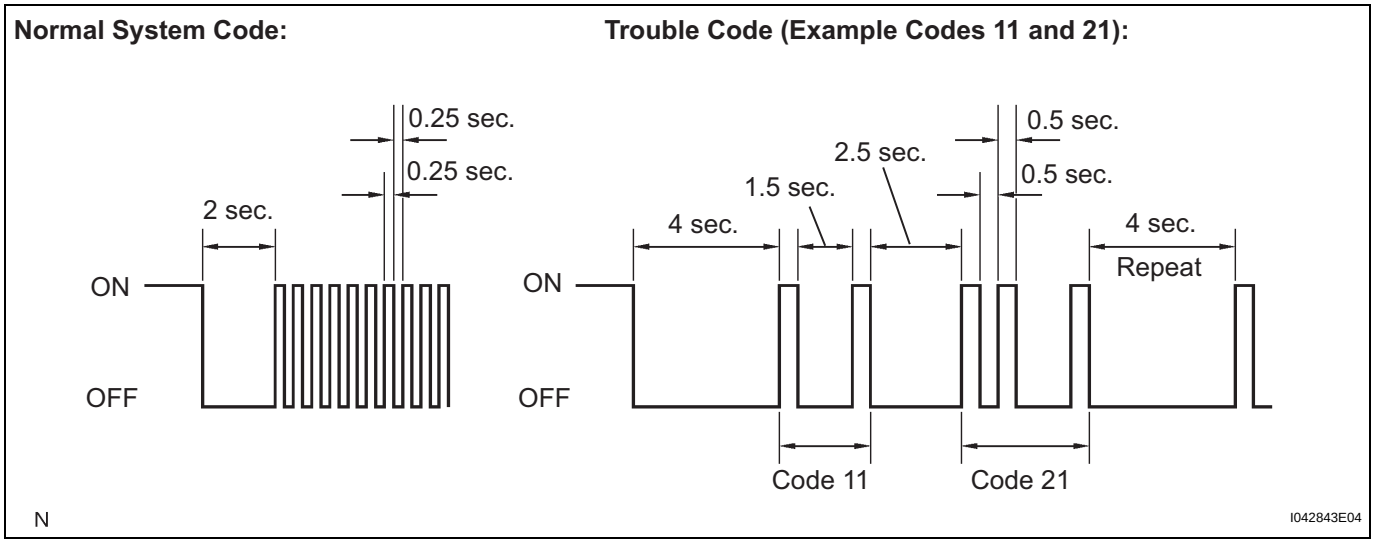

(5) Codes are explained in the code table (See page BC-102).
(6) After completing the check, disconnect terminals TC and CG of the DLC3, and turn off the display. If 2 or more DTCs are detected at the same time, the DTCs will be displayed in ascending order.

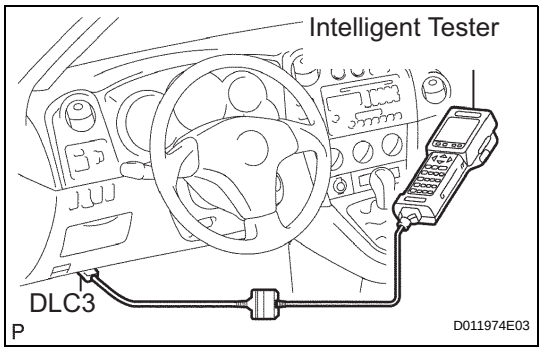

2. DTC CHECK

(a) Check DTCs.
(1) Connect the intelligent tester to the DLC3.
(2) Turn the ignition switch to the ON position.
(3) Read the DTCs following the prompts on the tester screen.
HINT:
Refer to the intelligent tester operator's manual for further details.

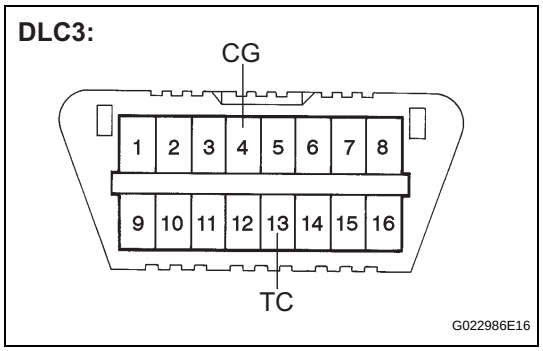

3. CLEAR DTC (USING SST CHECK WIRE)

(a) Clear the DTCs using the SST check wire.

(1) Using SST, connect terminals TC and CG of the DLC3.
SST 09843-18040

(2) Turn the ignition switch to the ON position.

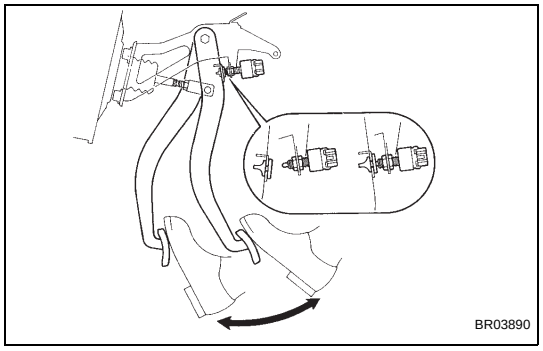

(3) Clear the DTCs stored in the ECU by depressing the brake pedal 8 times or more within 5 seconds.

(4) Check that the warning light indicates a normal system code.

(5) Remove the SST.
HINT:
Clearing the DTCs cannot be performed by removing the battery cable or the ECU-IG fuse

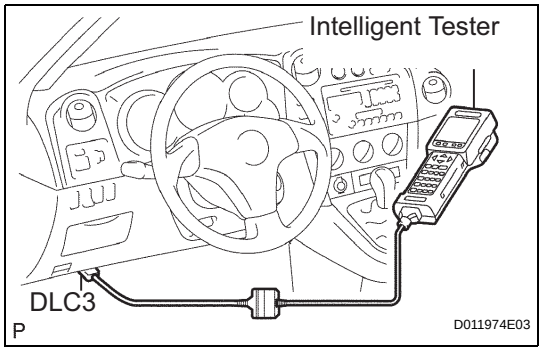

4. CLEAR DTC

(a) Clear the DTCs using the intelligent tester.

(1) Connect the intelligent tester to the DLC3.

(2) Turn the ignition switch to the ON position.

(3) Operate the intelligent tester to clear the codes.
HINT:
Refer to the intelligent tester operator's manual for further details.

5. END OF DTC CHECK / CLEAR

(a) Turn the ignition switch to the ON position

(b) Check that the ABS warning light and VSC warning light go off within approximately 3 seconds.